FEMALE END VIEW

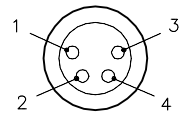

WIRING DIAGRAM

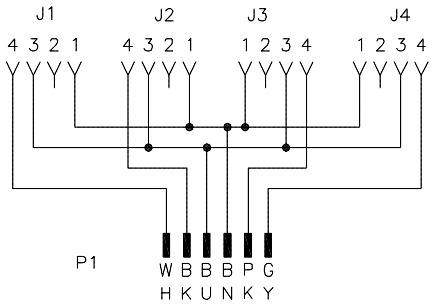

SPECIFICATIONS

CONTACT CARRIER MATERIAL	NYLON OR TPU
MOLDED HEAD MATERIAL/COLOR	TPU/YELLOW
CONTACT MATERIAL/PLATING	BRASS/GOLD
COUPLING NUT MATERIAL/PLATING	BRASS/NICKEL
RATED CURRENT [A]	1.0 A
RATED VOLTAGE [V]	30 V
OUTER JACKET MATERIAL/COLOR	PVC/GRAY
CONDUCTOR INSULATION MATERIAL	PVC
NUMBER OF CONDUCTOR [AWG]	6x24 AWG (P1); 3x24 AWG (J1–J4)
TEMPERATURE RATING	−40°C to +105°C (−40°F to +221°F)
PROTECTION CLASS	MEETS NEMA 1,3,4,6P AND IEC IP67

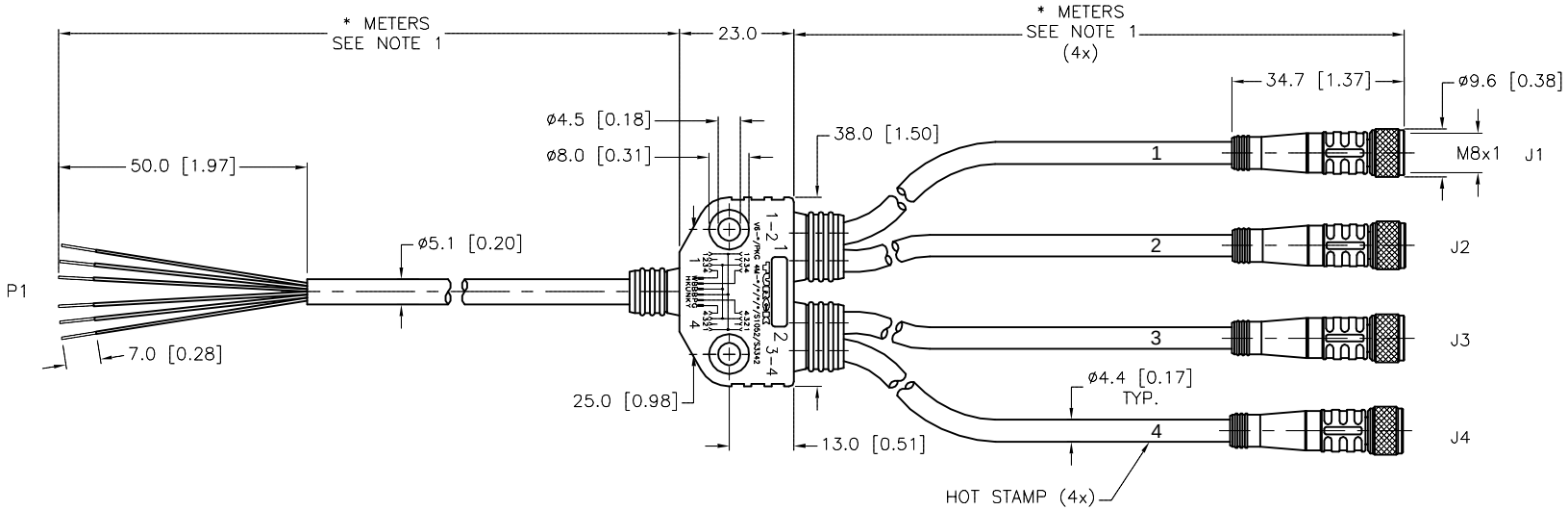

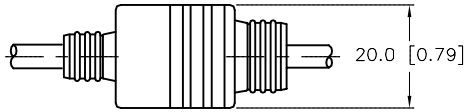

CABLE LENGTH	TOLERANCE *
ALL LENGTHS	+ 4% (OR 50mm) OF LENGTH − 0% (OR 0mm) OF LENGTH WHICHEVER IS GREATER
STRIP LENGTH	**TOLERANCE ***
0–7mm	±0.5mm
8–29mm	±1.0mm
30–49mm	±2.0mm
50–69mm	±3.0mm
70–100mm	±4.0mm
OVER 100mm	±5.0mm
* UNLESS OTHERWISE SPECIFIED	

SOURCE DRAWING - FOR REFERENCE ONLY

NOTES:

1. "*" INDICATES CABLE LENGTH IN METERS. CONTACT TURCK TO ORDER SPECIFIC LENGTHS.
2. "/S1052" DESIGNATES GRAY CABLE.
3. "/S3342" DESIGNATES 4 PIN PICOFAST WITH 3 CONDUCTOR CABLE.

REV	DESCRIPTION	BY	DATE	ECO NO.
A	DRAWING RELEASE	NF	08/02/16	

RELATED DOCUMENTS
1.
2.
3.
4.

3RD ANGLE PROJECTION

THIS DRAWING IS CONFIDENTIAL AND THE PROPERTY OF TURCK INC. USE OF THIS DOCUMENT WITHOUT WRITTEN PERMISSION IS PROHIBITED.

TURCK

3000 CAMPUS DRIVE
MINNEAPOLIS, MN 55441
1-800-544-7769
(763) 553-7300
(763) 553-0708 fax
www.turck.us

MATERIAL: SEE SPECIFICATIONS

FINISH: SEE SPECIFICATIONS

ALL DIMENSIONS DISPLAYED ON THIS DRAWING ARE FOR REFERENCE ONLY

CONTACT TURCK FOR MORE INFORMATION

DRFT: NF | DATE: 07/14/16
APVD: D.N. | SCALE: 1=1.5

UNIT OF MEASUREMENT
MILLIMETER [INCH]
DO NOT SCALE THIS DRAWING

DESCRIPTION: V6-*/PKG 4M-*/*/*/*/S1052/S3342

IDENTIFICATION NO.

REV: A

FILE: 777037852 | SHEET 1 OF 1

Approved 07/18/2016, work order #110351 by D.N.